Pergola

PR6000®

TECHNICAL SPECIFICATION DOCUMENT

PORTOS®

TABLE OF CONTENTS:

PR6000-HT Pergola	2
Cross-sections	4
Specification of parts	8
Dimensioning	25
Assembly drawings – pergola with two motors	26
Pergola PR6000-LITE	27
Cross-sections	28
Specification of parts	32
Dimensioning	40

PR6000®

PR6000 is a trade mark of PORTOS.
All pictures and drawings included herein are only for illustrative purposes.
PORTOS reserves the right to make changes. ®2022 PORTOS.
All rights reserved.

Technical specification

PR6000®

MAP KEY (EXPLANATIONS:

1rm 0,2kg / 1pc 0,3kg	Approximate weight of the part (in kilos)
Max. 4,5rm / Max. 7rm	Maximum length of long elements (in metres)
STEEL / ALU / PVC	Material used for the production of the element (e.g. STEEL, PVC, etc.)
	Elements with a lining option

PR6000® system diagram and list of parts
Standalone

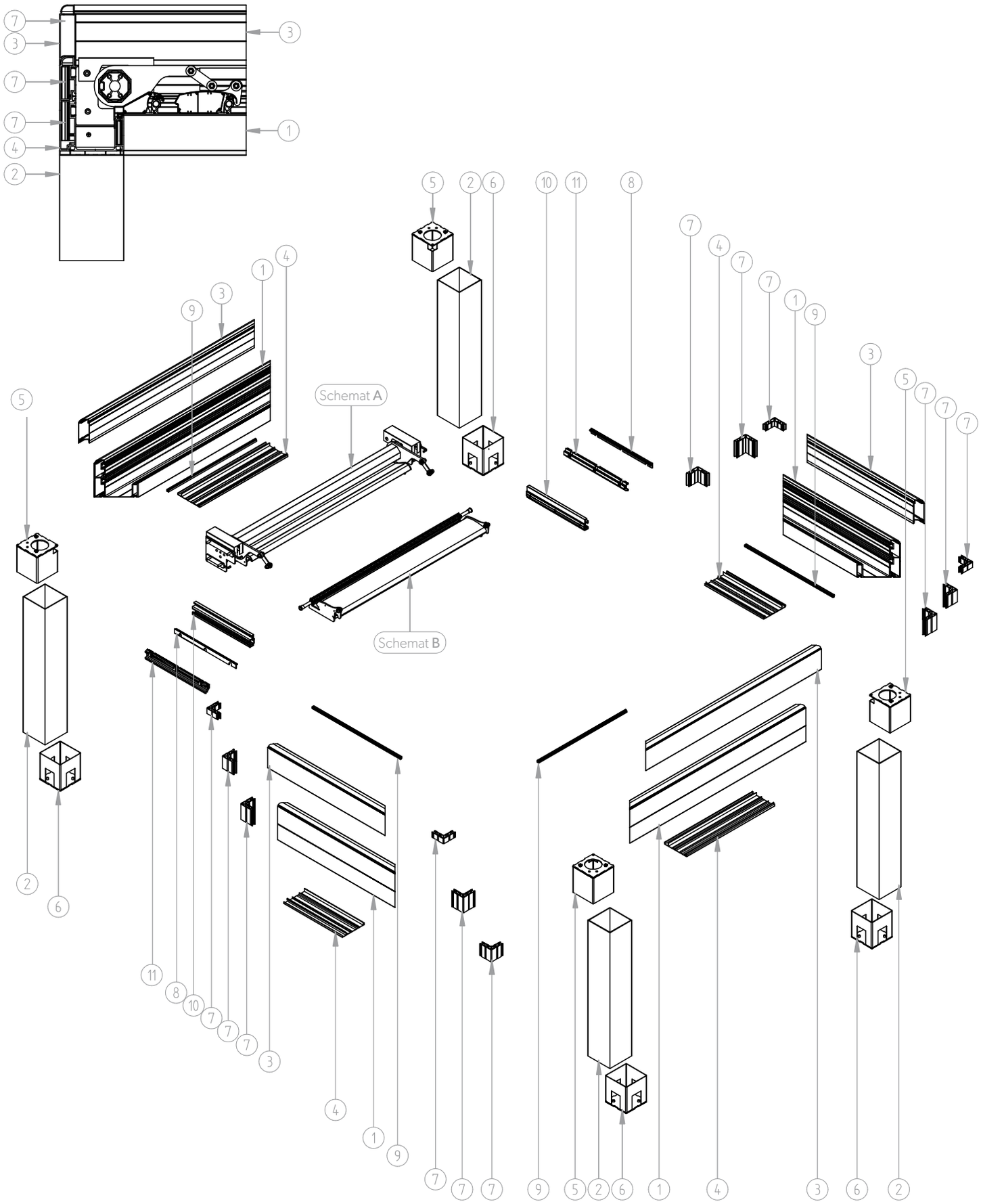

PR6000® Standalone - list of parts

1.	PRP-010	Side profile – gutter
2.	PRP-040	Load bearing column of pergola
3.	PRP-020	Gutter height adjustment profile
4.	PRP-160	Gutter bottom masking profile
5.	PRT-050	Upper column bracket
6.	PRT-060	Bottom column bracket
7.	PRP-140	Gutter corner bracket
8.	PRP-120	Protective profile for the slats
9.	PRU-040	'B' type gutter seal
10.	PRP-100	Slat bracket profile
11.	PRP-110	Slat fixing profile

PR6000® system diagram and list of parts
Wall Mounted

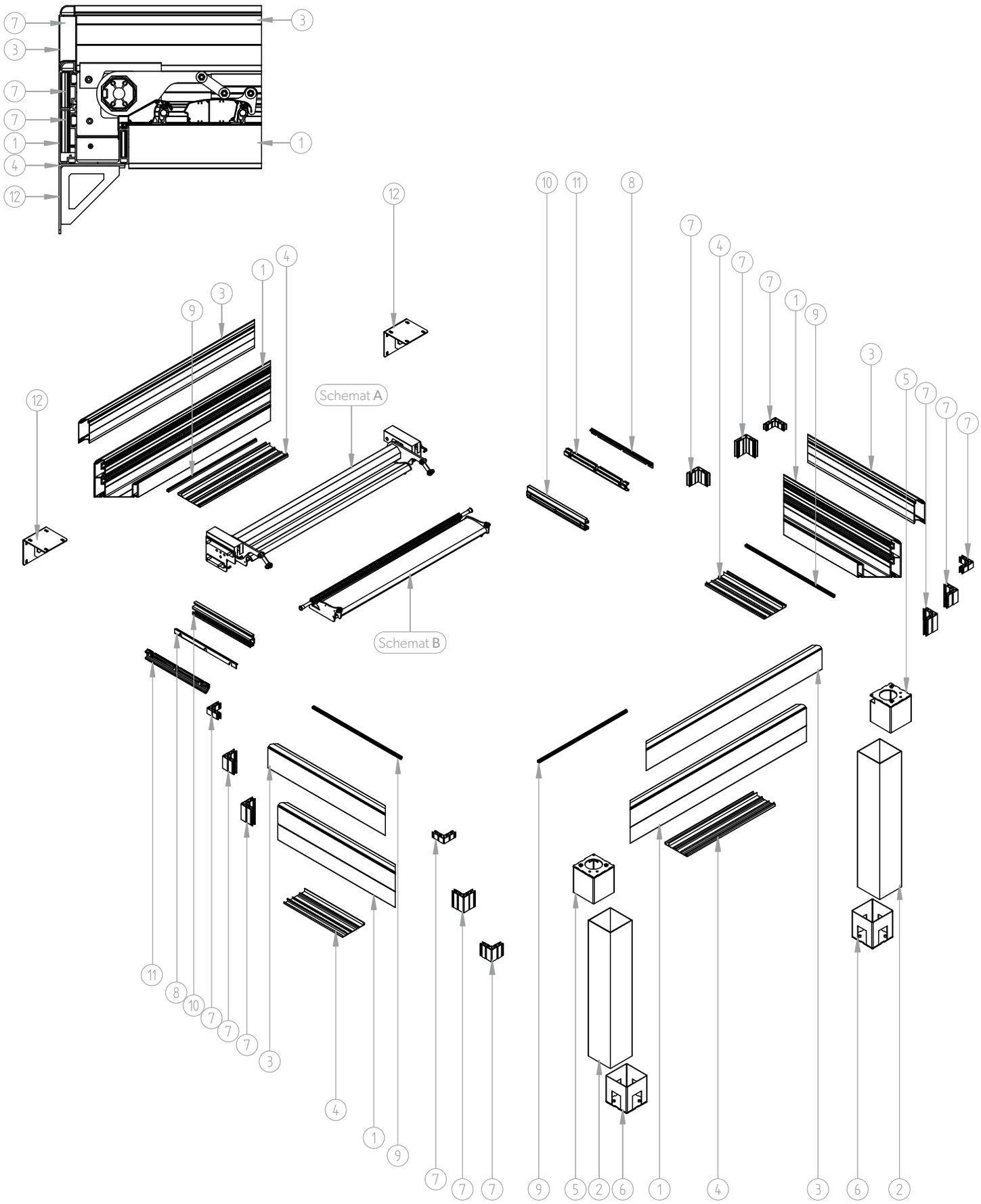

PR6000® Wall Mounted - list of parts

1.	PRP-010	Side profile – gutter
2.	PRP-040	Load bearing column of pergola
3.	PRP-020	Gutter height adjustment profile
4.	PRP-160	Gutter bottom masking profile
5.	PRT-050	Upper column bracket
6.	PRT-060	Bottom column bracket
7.	PRP-140	Gutter corner bracket
8.	PRP-120	Protective profile for the slats
9.	PRU-040	'B' type gutter seal
10.	PRP-100	Slat bracket profile
11.	PRP-110	Slat fixing profile
12.	PRT-160	Wall Mount Bracket

Diagram **A** - assembly drawing and list of parts of the motor system with the first slat.

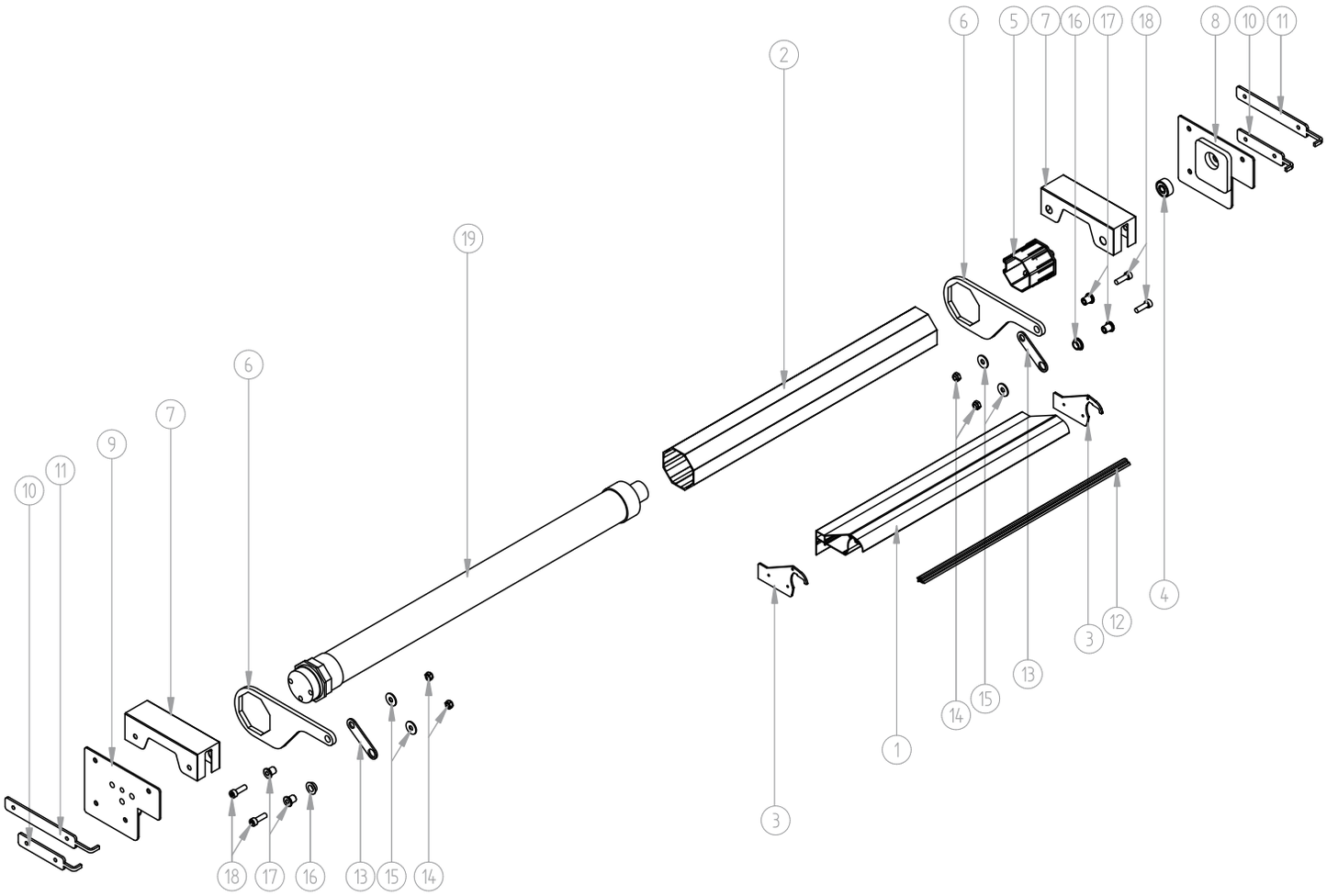

1.	PRP-180	The first fixed roof slat
2.	PRP-060	Octagonal tube
3.	PRT-230	Side end cap of the first fixed roof slat
4.		Ball bearings
5.	PRT-130	Holder ALU 70mm
6.	PRT-240	Slat motor holder
7.	PRT-300	Motor casing for the fixed slat
8.	PRT-290	R/LRight/left gantry plate to fix motor to the fixed slat
9.	PRT-280	R/LRight/left side motor plate for the fixed slat
10.	PRT-260	Small nut of the motor plate bracket – for the slats
11.	PRT-270	Large nut of the motor plate bracket – for the slats
12.	PRU-020	'A' type slat seal
13.	PRT-250	Slat motor bracket
14.	M8 NUT	M8 Self-locking Counter Nut
15.	23 WASHER	FI 8 WASHER
16.	PRD-070	Sliding sleeve 12 mm
17.	PRT-180	Threaded sleeve
18.	M8x25 SCREW	M8x25 Hex socket head screw
19.		Motor

Diagram **B** - assembly drawing and list of parts of other slats.

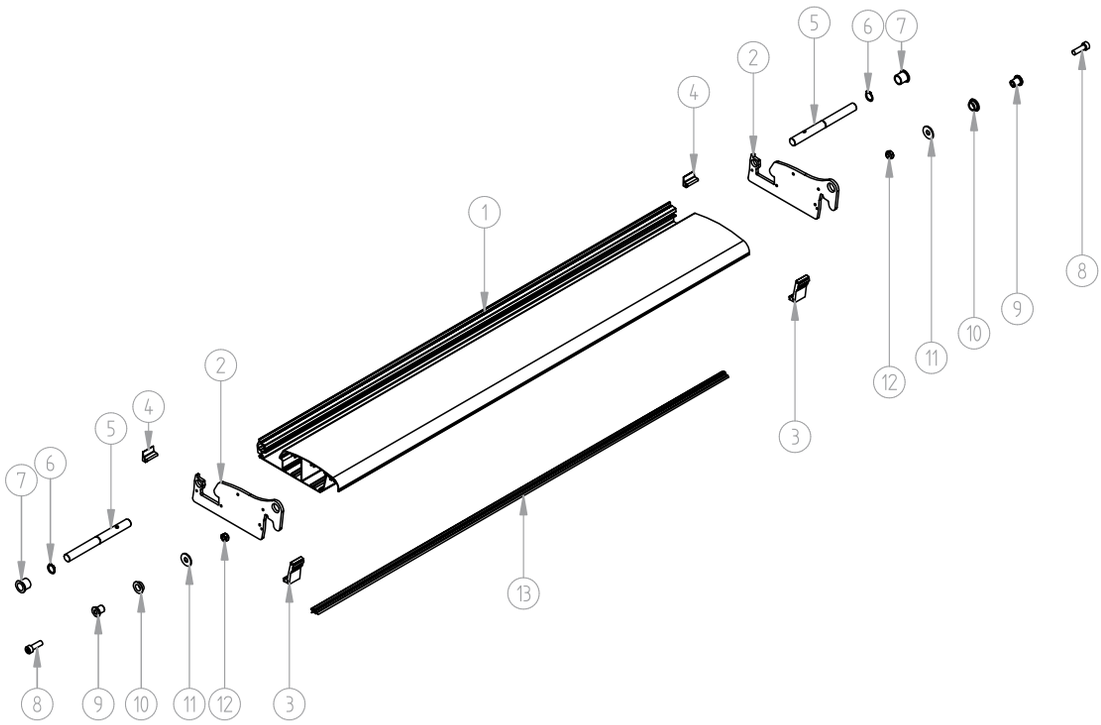

1.	PRP-080	Roof slat
2.	PRT-020	Side end cap of the roof slat
3.	PRD-020	Roof slat seal – large
4.	PRD-010	Roof slat seal – small
5.	PRT-150	Mandrel of the slats
6.		External stop collar Fi 14
7.	PRD-060	Sliding sleeve 14 mm
8.	ŚRUBA M8x25	M8x25 Hex socket head screw
9.	PRT-180	Threaded sleeve
10.	PRD-070	Sliding sleeve 12 mm
11.	PODKŁADKA 23	FI 8 WASHER
12.	NAKRĘTKA M8	M8 Self-locking Counter Nut
13.	PRU-020	'A' type slat seal

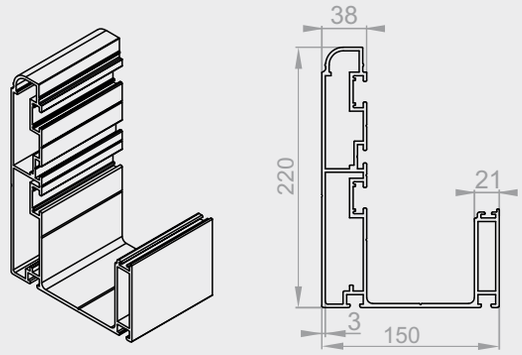

PRP-010

Side profile – gutter.

ALU | Max. 8rm | 1rm 7,705kg

PRP-020

Gutter height adjustment profile.

ALU | Max. 8rm | 1rm 1,911kg

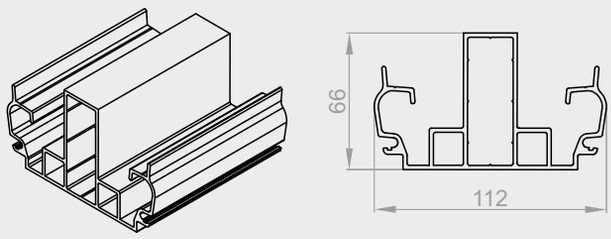

PRP-030

Roof bar.

ALU | 1rm 2,622kg

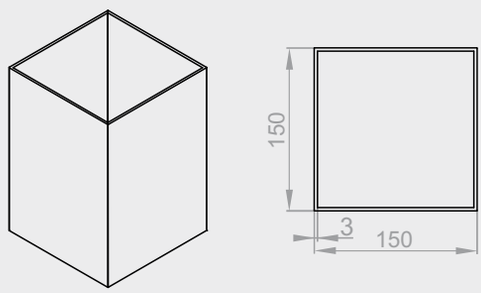

PRP-040

Load bearing column of pergola.

ALU | Max. 6rm | 1rm 4,734kg

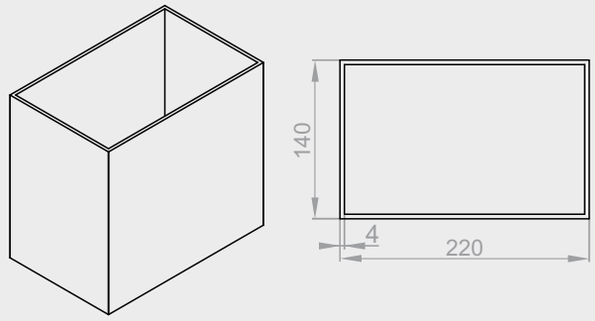

PRP-050

Double load bearing column of pergola.

ALU | Max. 6rm | 1rm 7,637kg

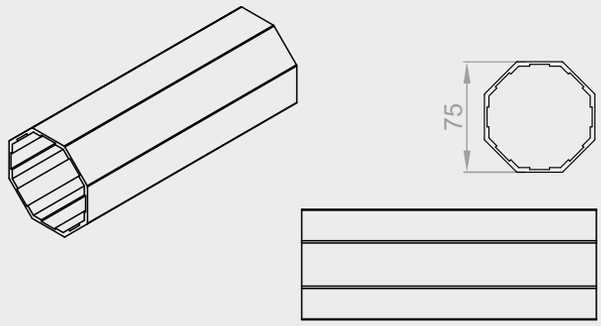

PRP-060

Octagonal tube.

Max. 4,5rm | ALU | 1rm 1,625kg

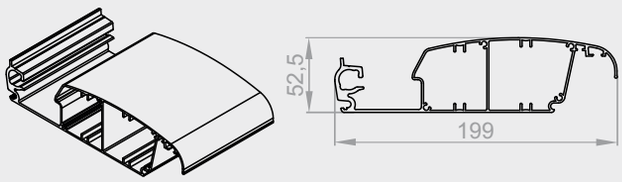

PRP-080

Roof slat.

ALU | Max. 4,5rm | 1rm 2,791kg

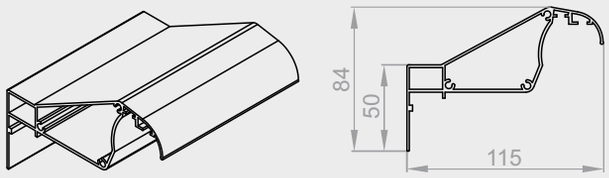

PRP-180

The first fixed roof slat.

ALU | Max. 4,5rm | 1rm 1,47kg

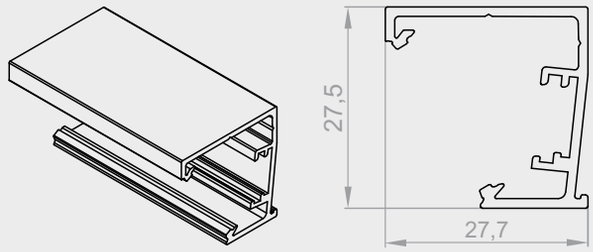

PRP-130

LED lighting profile.

ALU | Max. 6rm | 1rm 0,318kg

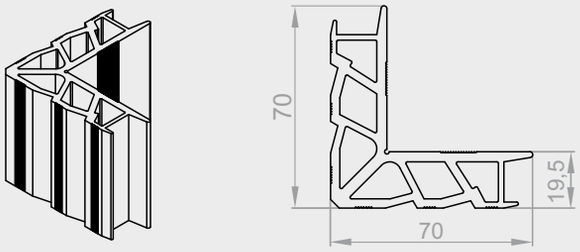

PRP-140

Gutter corner bracket.

ALU | Max. 3rm | 1rm 2,77kg

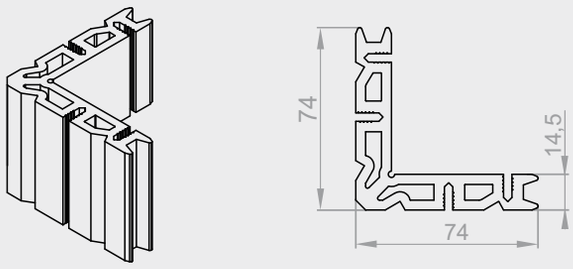

PRP-150

Internal gutter corner bracket.

ALU | Max. 3rm | 1rm 3,48kg

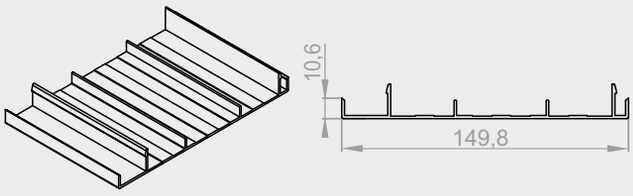

PRP-160

Gutter bottom masking profile.

ALU | Max. 8rm | 1rm 0,862kg

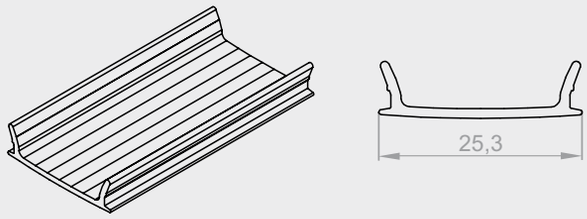

PRP-200

Casing of LED lighting profile.

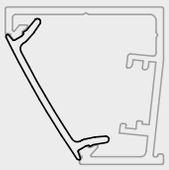

ALU | Max. 6rm | 1rm 0,117kg

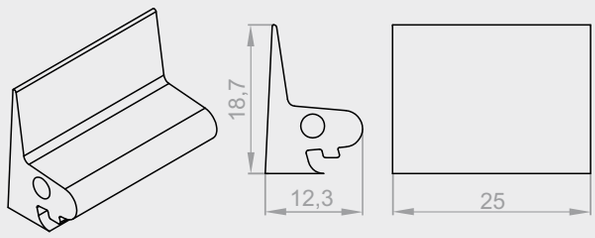

PRD-010

Roof slat seal.

PVC | 1pc 0,003kg

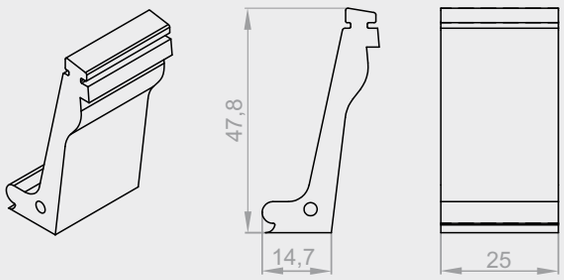

PRD-020

Large roof slat seal.

PVC | 1pc 0,012kg

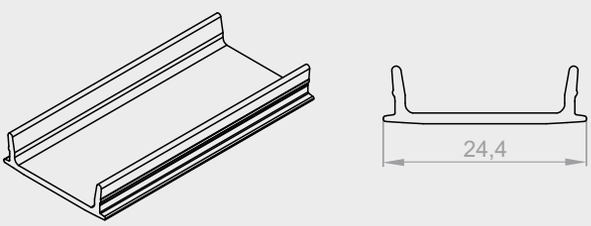

PRD-030

Casing of LED lighting.

PVC | 1rm 0,059kg

PRE-050

LED lighting profile.

1pc 0,001kg

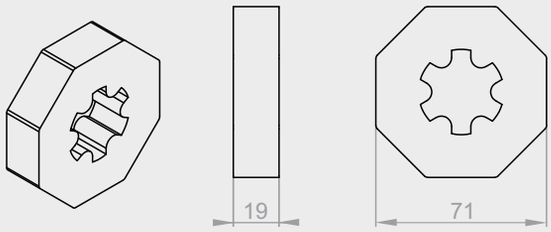

PRD-040

Drive 70 mm.

ALU 1pc 0,176kg

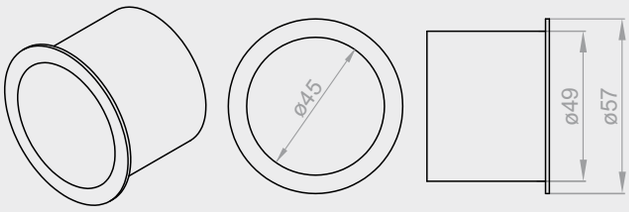

PRD-050

Water discharge sleeve.

PVC 1pc 0,018kg

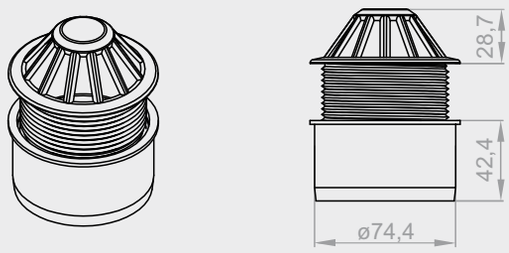

PRD-051

Water discharge sleeve.

PVC 1pc 0,044kg

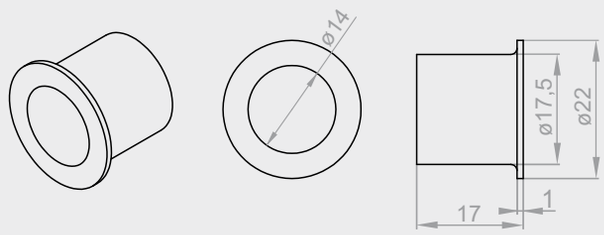

PRD-060

Sliding sleeve 14 mm.

PVC 1pc 0,002kg

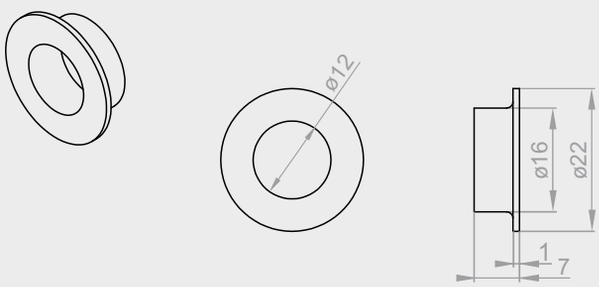

PRD-070

Sliding sleeve 12 mm.

PVC 1pc 0,001kg

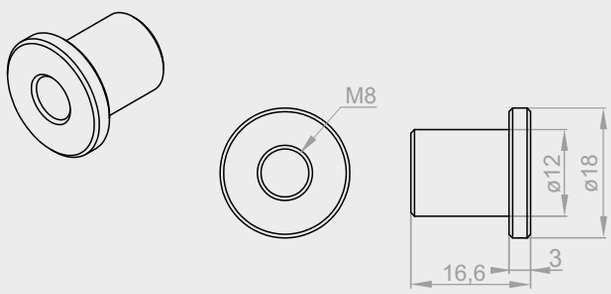

PRT-180

Threaded sleeve.

STEEL 1pc 0,013kg

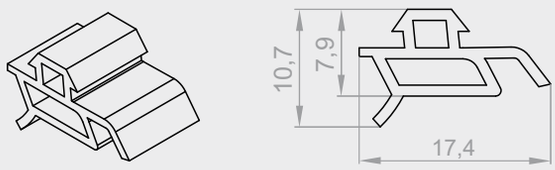

PRU-020

'A' type slat seal.

EPDM 1pc 0,067kg

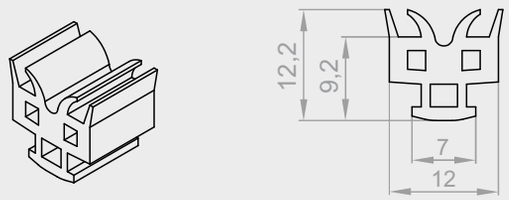

PRU-040

'B' type gutter seal.

EPDM 1rm 0,109kg

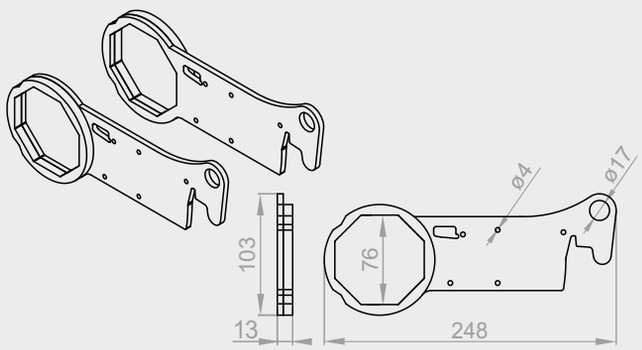

PRT-010 P/L

Right/left side end cap of the first roof slat.

STEEL 1pc 0,554kg

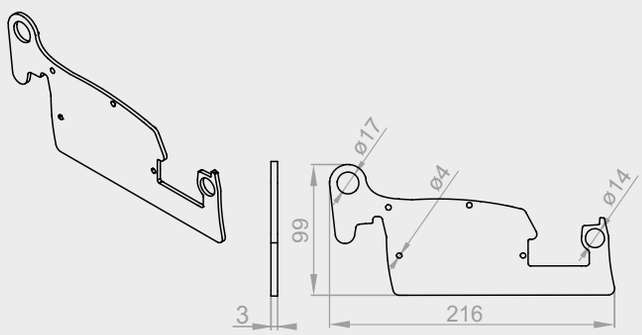

PRT-020

Side end cap of the roof slat.

STEEL 1pc 0,254kg

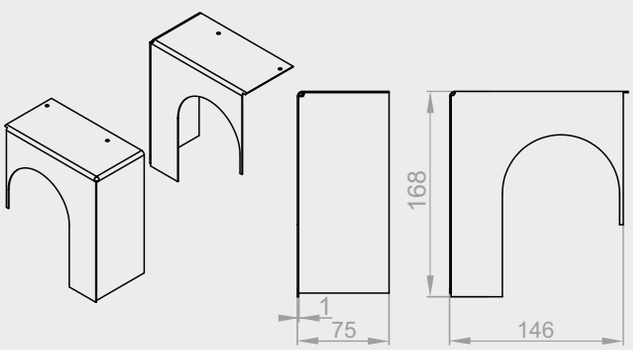

PRT-030 P/L

Right/left motor cover.

STEEL 1pc 0,27kg

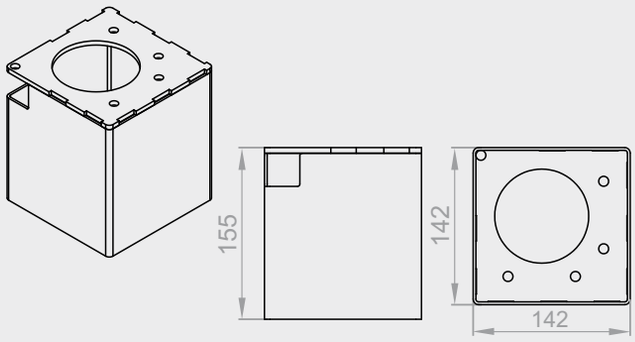

PRT-050

Upper column bracket.

STEEL 1pc 2,112kg

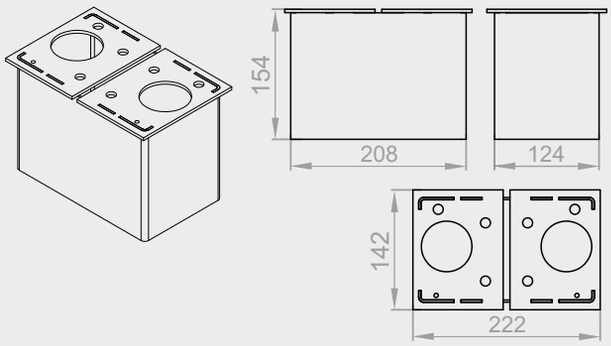

PRT-320

Double upper column bracket.

STEEL 1pc 2,642kg

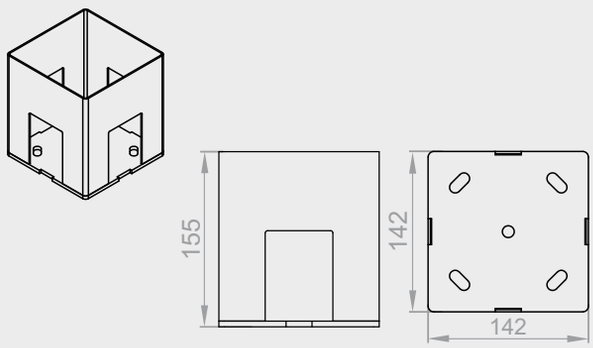

PRT-060

Bottom column bracket.

STEEL 1pc 3,5kg

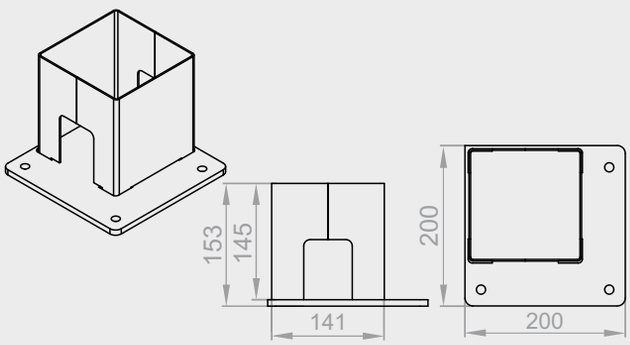

PRT-190

Bottom column bracket with a gantry plate.

STEEL 1pc 1,75kg

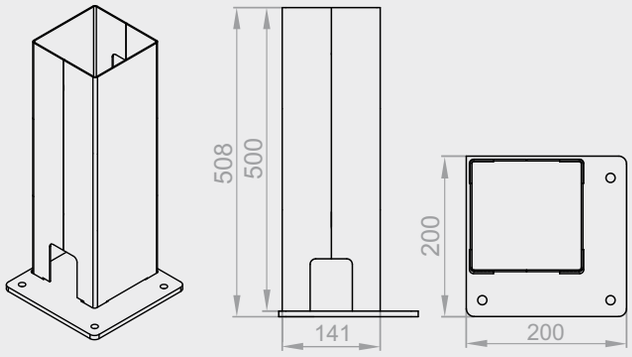

PRT-210

High bottom column bracket with a gantry plate.

STEEL 1pc 8,10kg

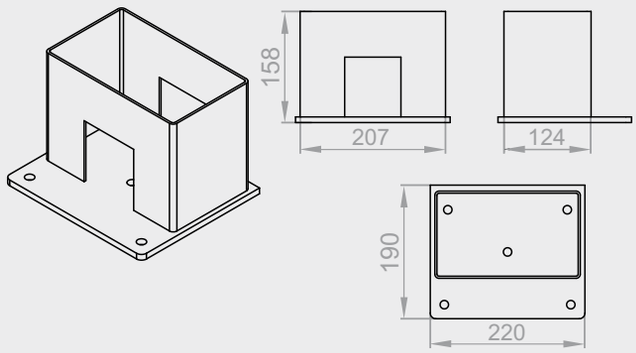

PRT-310

Double bottom column bracket.

STEEL 1pc 4,53kg

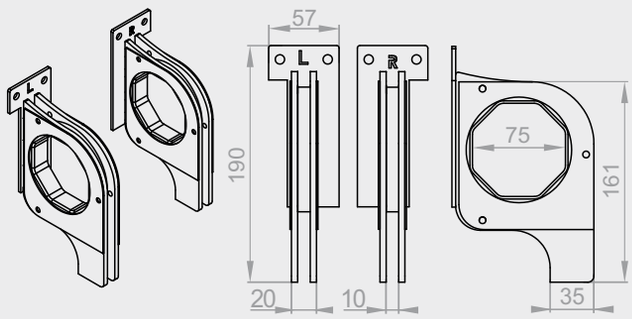

PTRK-010 P/L

Right/left safety chuck for the octagonal tube.

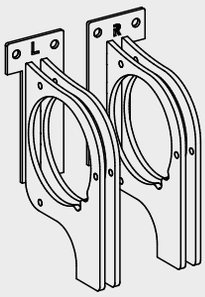

PRT-040 L+P
Octagonal tube mounting bracket.

PRT-070
Octagonal tube bearings.

PRT-080
Octagonal ring.

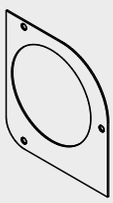

PRT-170 - 2 pieces for the set
Side metal sheet of the octagonal tube mounting bracket.

View of folded safety chuck for the octagonal tube **PRTK-010**:

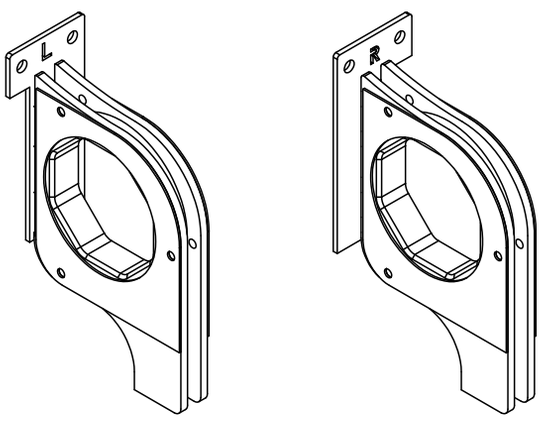

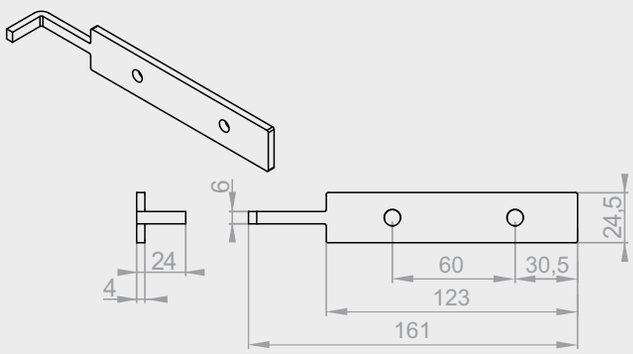

PRT-090

Nut of the motor plate bracket.

STEEL 1pc 0,103kg

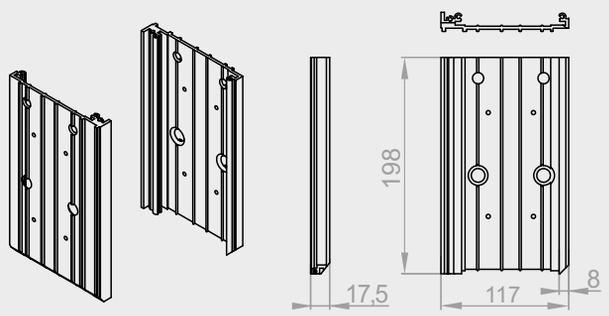

PRT-100 P/L

Right/left motor plate bracket.

ALU 1pc 0,277kg

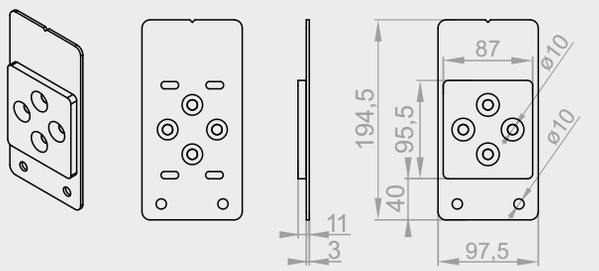

PRT-110

Motor gantry plate.

STEEL 1pc 0,85kg

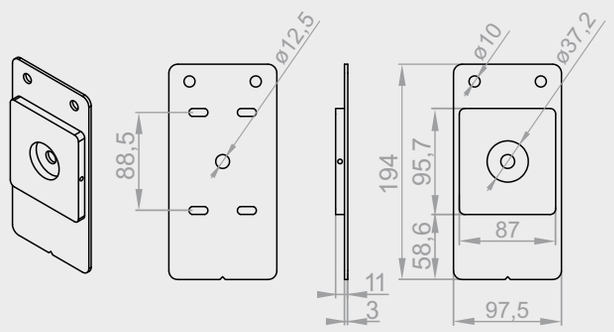

PRT-120

Side motor plate.

STEEL 1pc 0,876kg

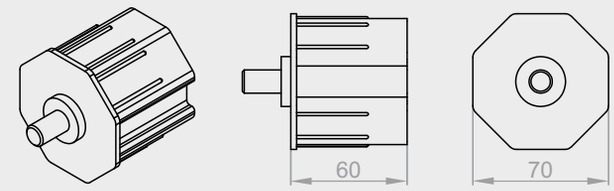

PRT-130

Holder ALU 70mm.

ALU | 1pc 0,17kg

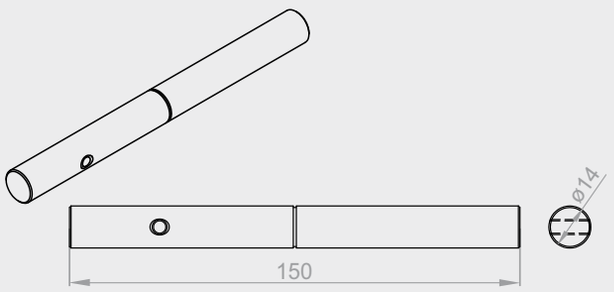

PRT-150

Mandrel of the slats.

STEEL | 1pc 0,179kg

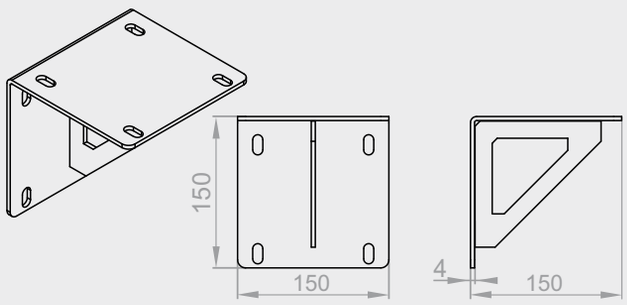

PRT-160

Wall mount bracket.

STEEL | 1pc 1,54kg

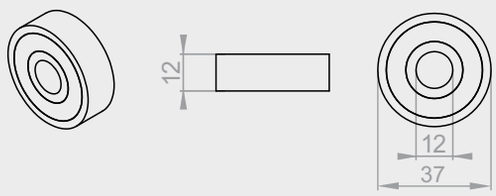

PRT-200

Ball bearings 6301 ZZ 12x37x12.

STEEL

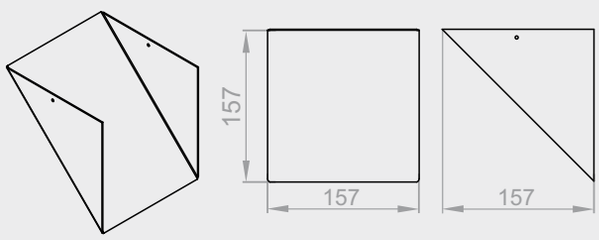

PRT-220

Wall mount bracket cover.

ALU | 1pc 0,222kg

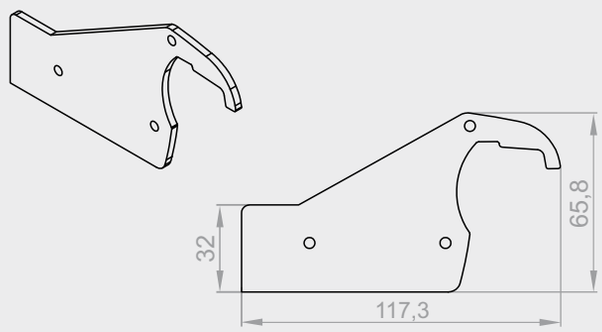

PRT-230

Side end cap of the first fixed roof slat.

STEEL 1pc 0,1kg

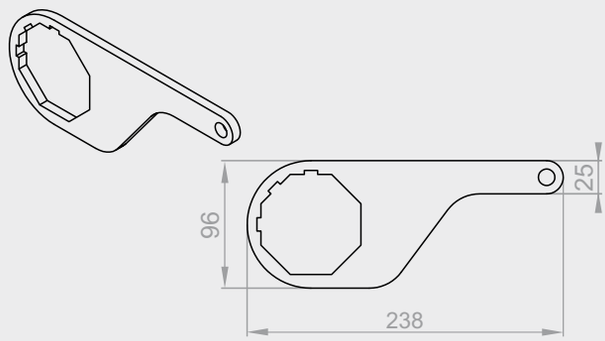

PRT-240

Slat motor holder.

STEEL 1pc 0,59kg

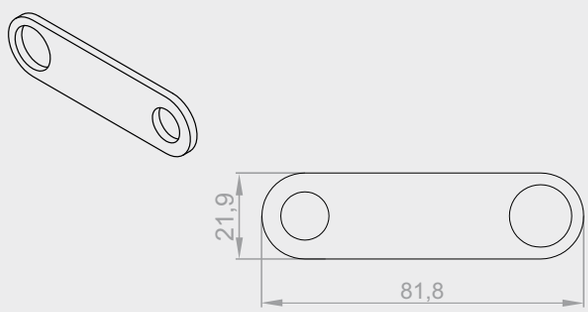

PRT-250

Slat motor bracket.

STEEL 1pc 0,03kg

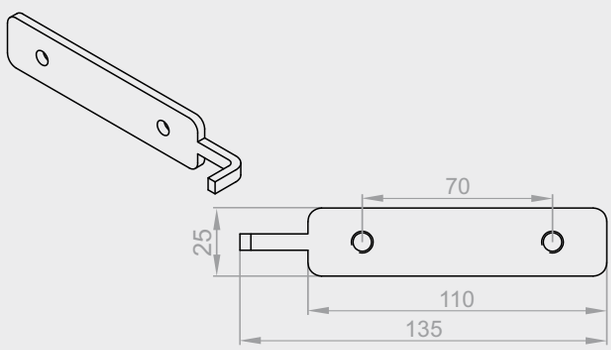

PRT-260

Small nut of the motor plate bracket - for the slats.

STEEL 1pc 0,09kg

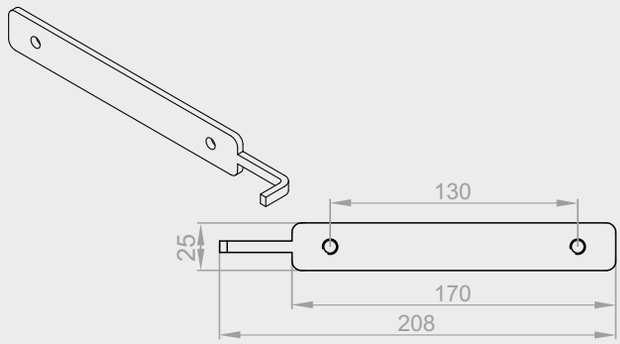

PRT-270

Large nut of the motor plate bracket – for the fixed slat.

STEEL 1pc 0,14kg

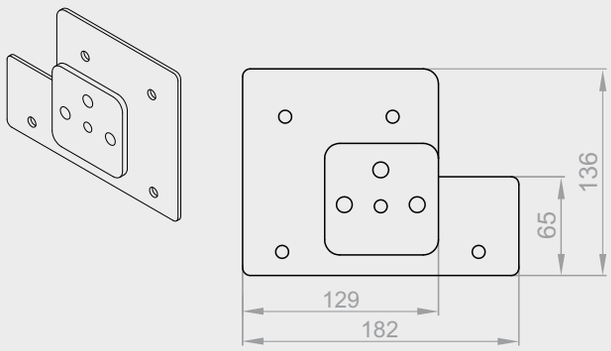

PRT-280 P/L

Right/left side motor plate for the fixed slat.

STEEL 1pc 0,68kg

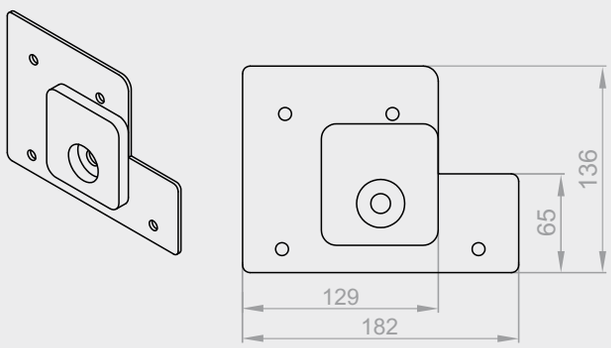

PRT-290 P/L

Right/left gantry plate to fix the motor to the fixed slat.

STEEL 1pc 0,9kg

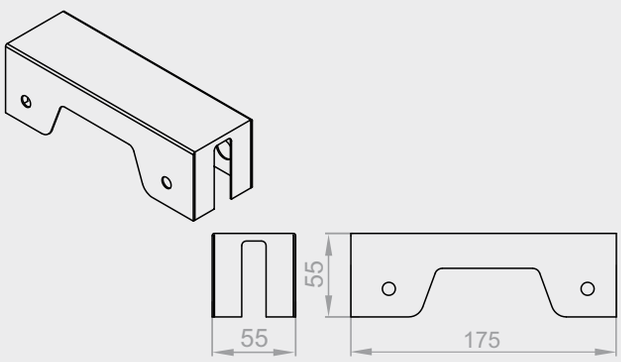

PRT-300

Motor casing for the fixed slat.

STEEL 1pc 0,21kg

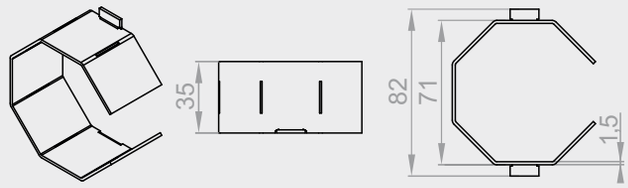

PRT-140

Octagonal motor adapter.

STEEL 1pc 0,083kg

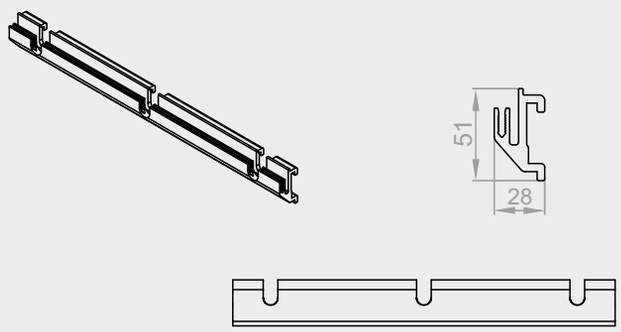

PRP-110

Slat fixing profil.

ALU 1rm 1,302kg

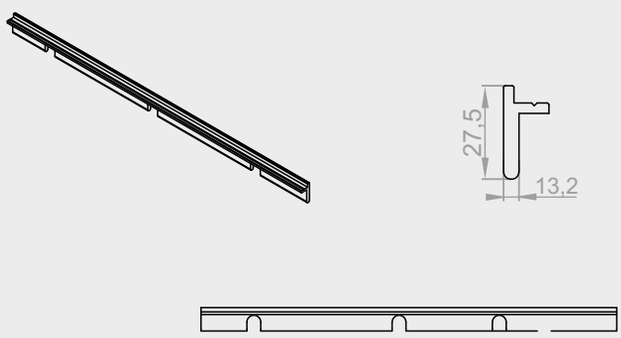

PRP-120

Protective profile for the slats.

ALU 1rm 0,354kg

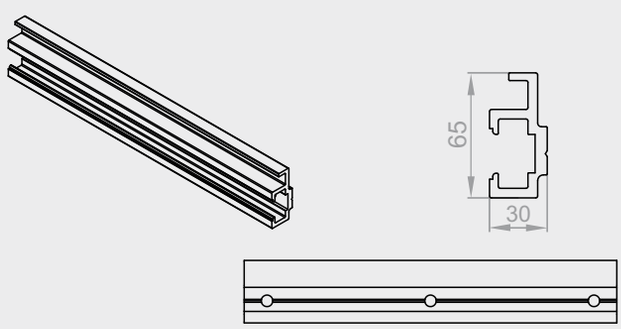

PRP-100

Slat bracket profile.

ALU 1rm 1,805kg

Dimensioning of PR6000 pergola

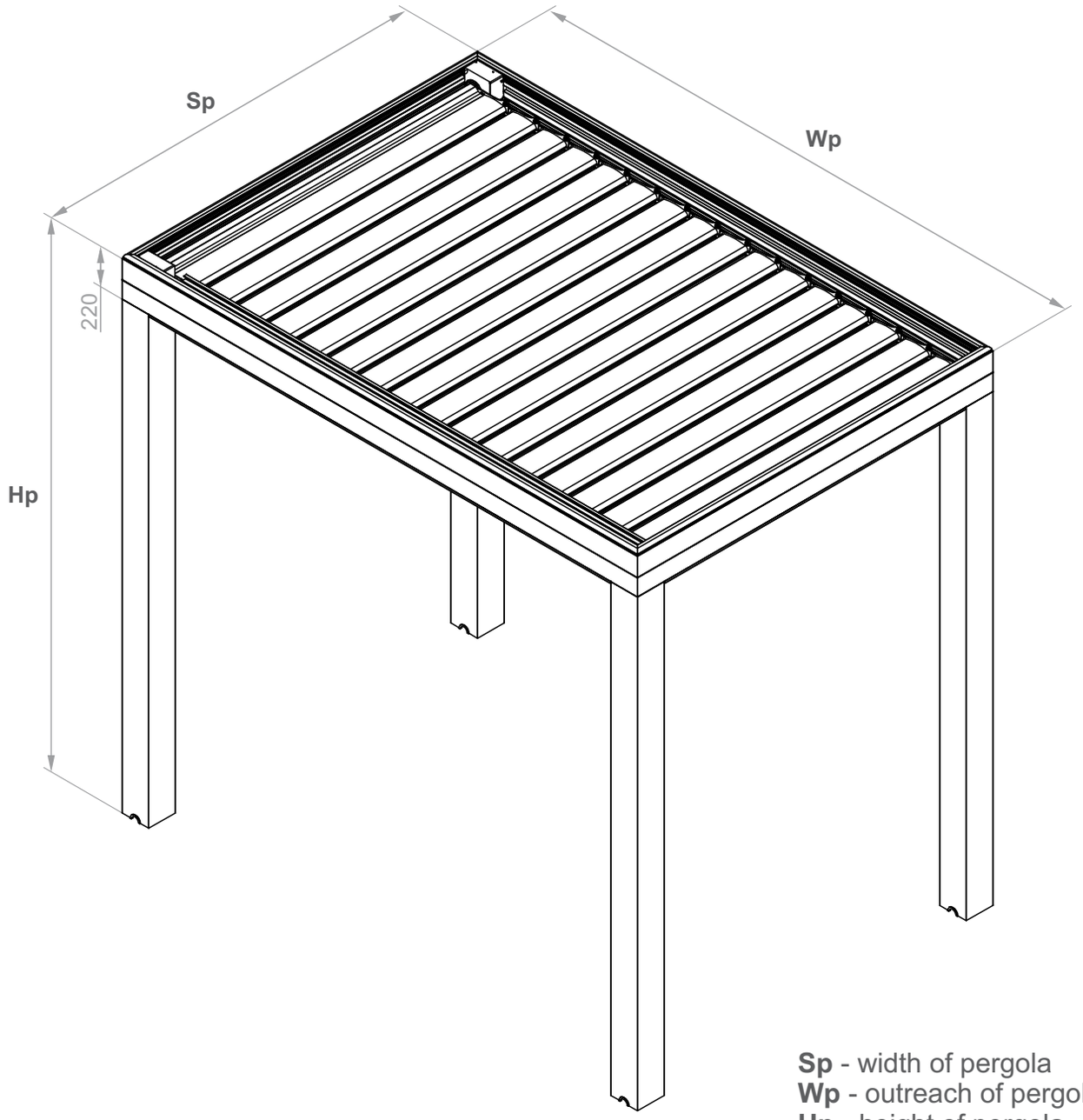

Sp - width of pergola
Wp - outreach of pergola
Hp - height of pergola

Cross-section of pergola with two motors

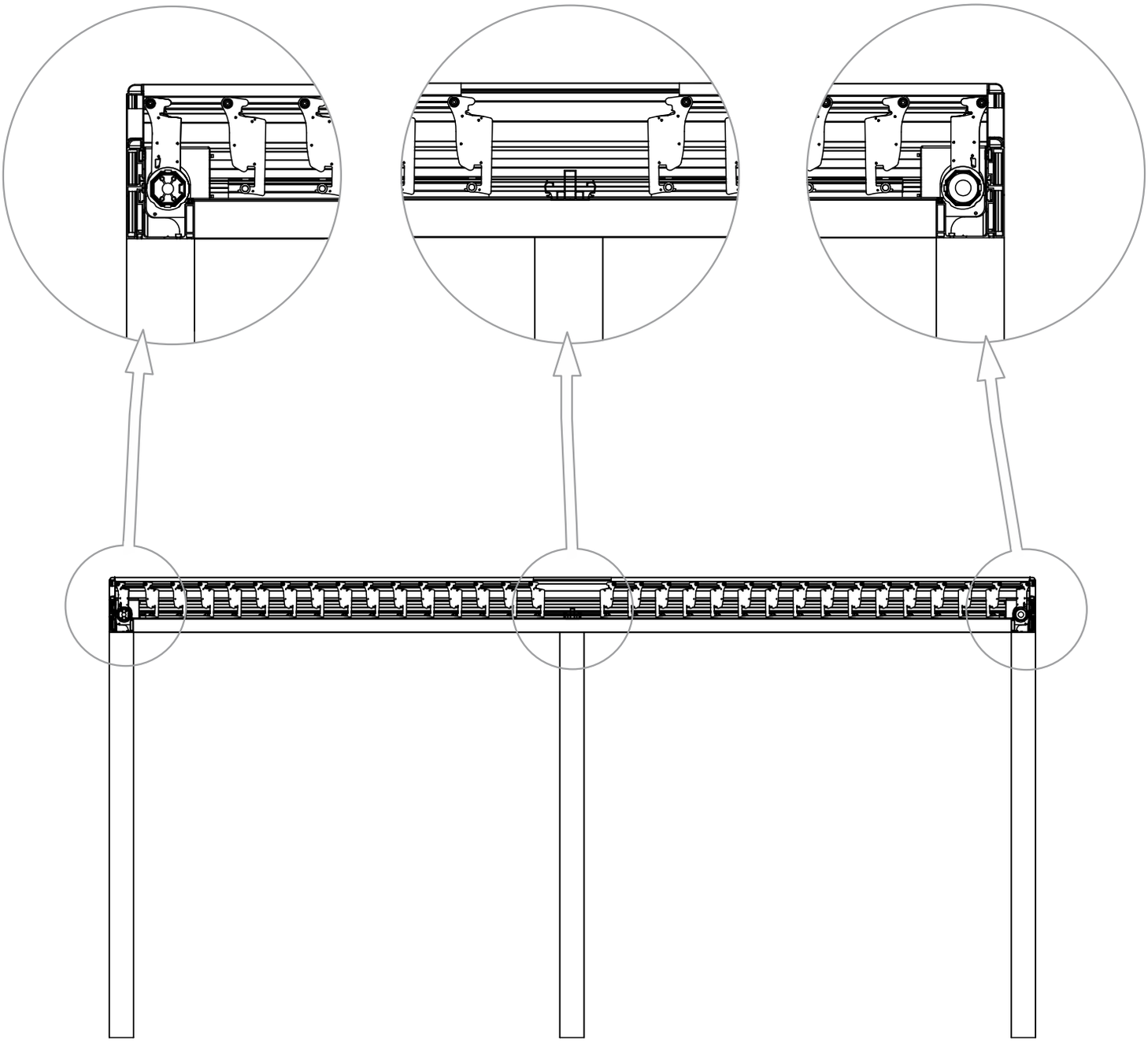

PR6000® Lite

PR6000® Light system diagram and list of parts
Standalone

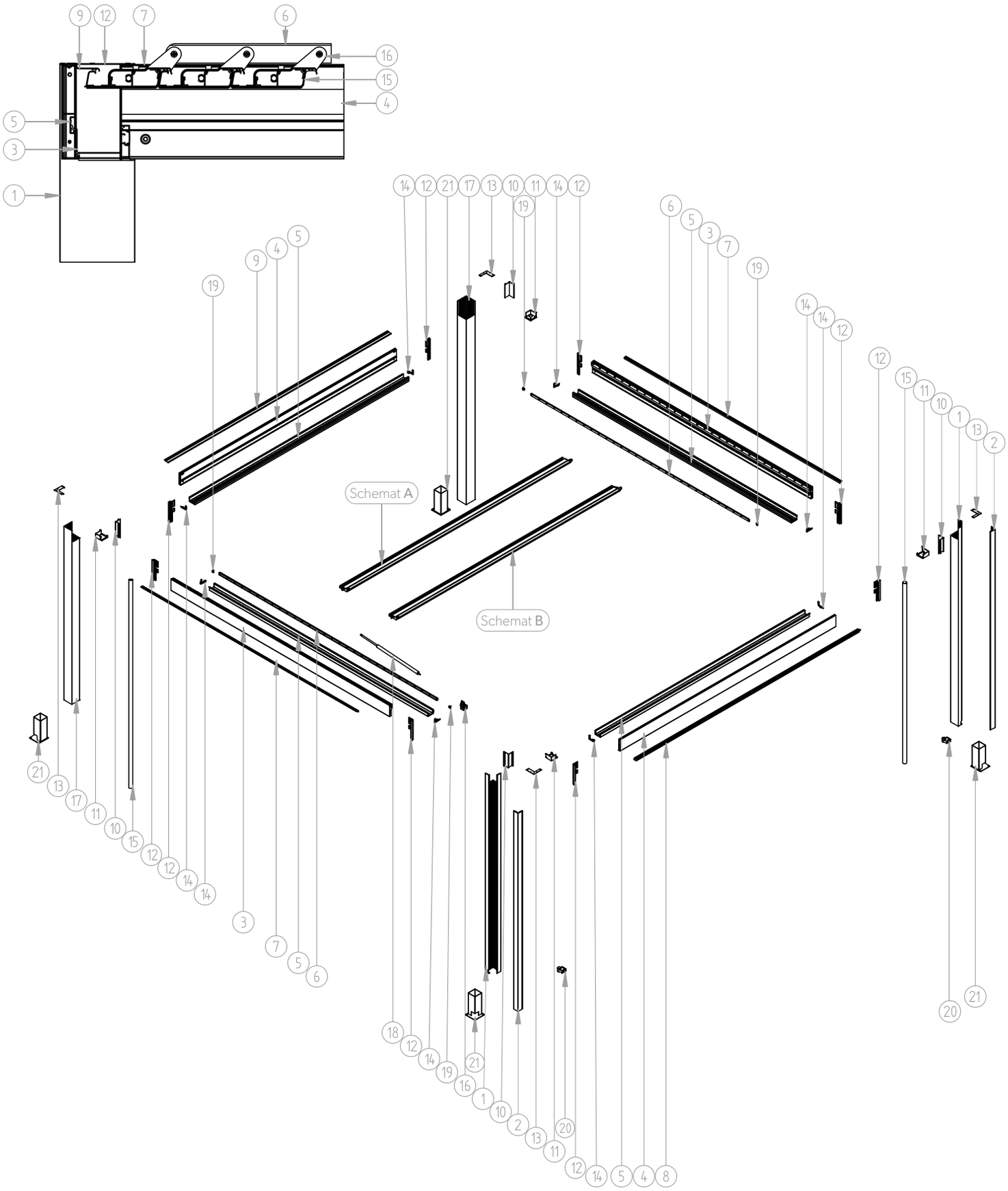

PR6000® LITE Standalone - list of parts

1.	PWP-070	Load bearing column
2.	PWP-080	External casing of the column
3.	PWP-030	Side frame – outreach
	PWP-030 S	Side frame – Motor outreach
	PWP-031 S	Side frame – Motor outreach
4.	PWP-020	Side frame width
5.	PWP-010	Gutter bottom profile
6.	PWP-091	Slat bracket profile
7.	PWP-170	Upper end cap
8.	PWP-050	The first fixed slat
9.	PWP-040	The last fixed slat
10.	PWP-140	Corner bracket connector
11.	PWU-010	Corner seal
12.	PWP-130	Right/left corner bracket
13.	PWT-040	Upper end cap of the column
14.	PWD-070	Bottom end cap of the gutter – width
	PWD -080	Bottom end cap of the gutter – outreach – left/right
15.		Water discharge pipe
16.	PWP-160	Mounting bracket to fix the motor to the gutter
17.	PWP-180	Load bearing column without revision
18.	S-JCA-190	Motor
19.	PWD-110 L/P	Cap of the slat bracket profile
20.	PWD-100	Water outlet at the bottom of Load bearing column
21.	PWT-110	Load bearing column coupler

Diagram **A** - assembly drawing and list of parts of the first slat.

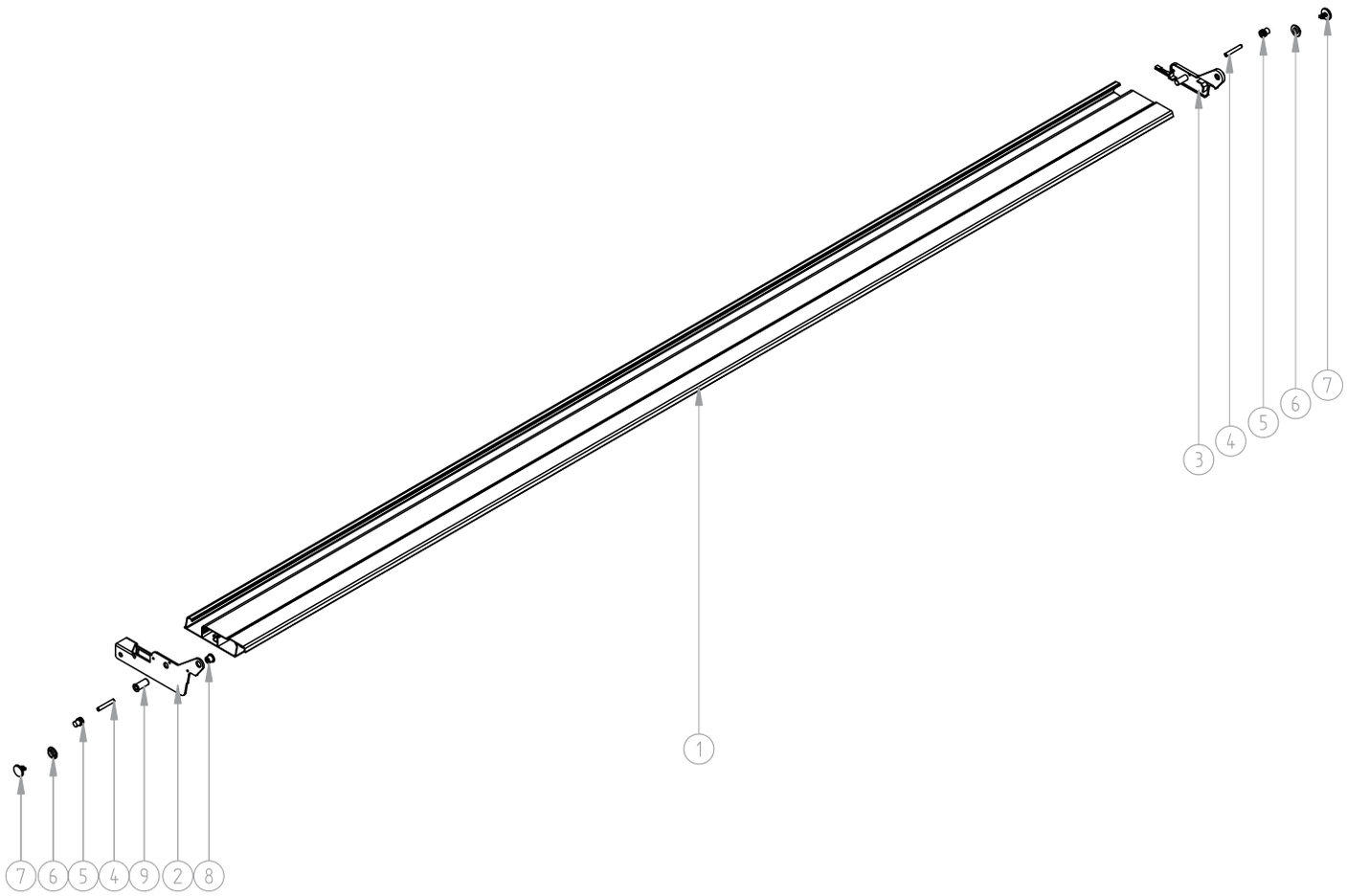

1.	PWP-060	Roof slat
2.	PWT-120	Bracket to connect slats to the motor
3.	PWD-010 L/P	Left/right side end cap of the slat
4.	PWT-010	Roll shaft 6 mm
5.	PWD-020	Slat mandrel
6.	PWD-050	Sleeve 12 mm
7.	PWD-060	Slat clamping system
8.	PWD-040	Ratchet Sleeve 12 mm for slats with a motor
9.	PWD-030	Sleeve for fastening driven lamella

Diagram **B** - assembly drawing and list of parts of other slats.

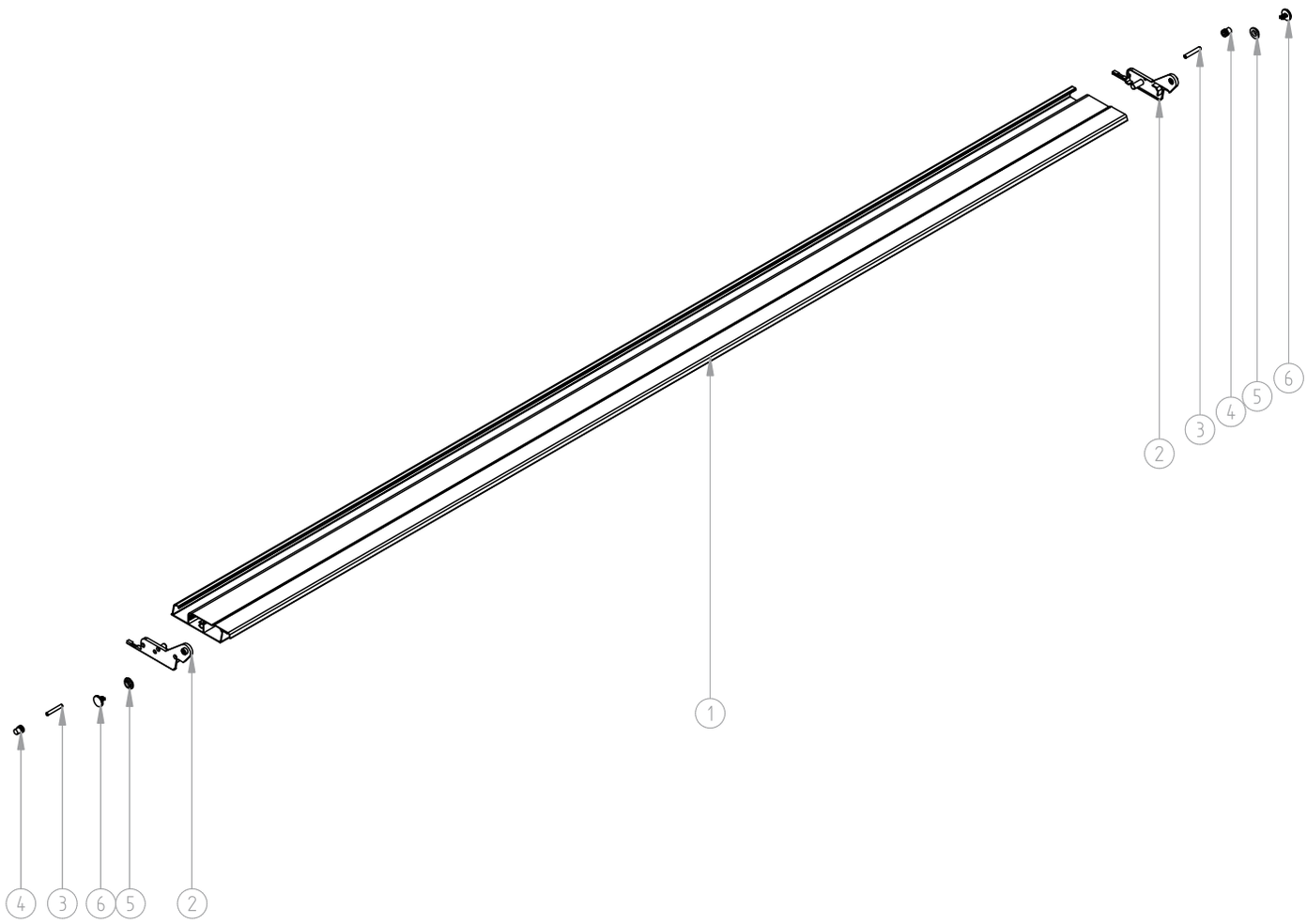

1.	PWP-060	Roof slat
2.	PWD-010 L/P	Left/right side end cap of the slat
3.	PWT-010	Roll shaft 6 mm
4.	PWD-020	Slat mandrel
5.	PWD-050	Sleeve 12 mm
6.	PWD-060	Slat clamping system

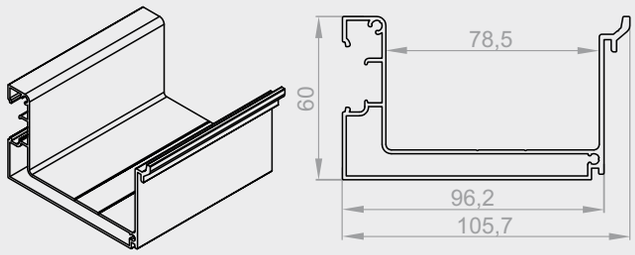

PWP-010

Bottom profile – gutter.

ALU 1rm 1,52kg

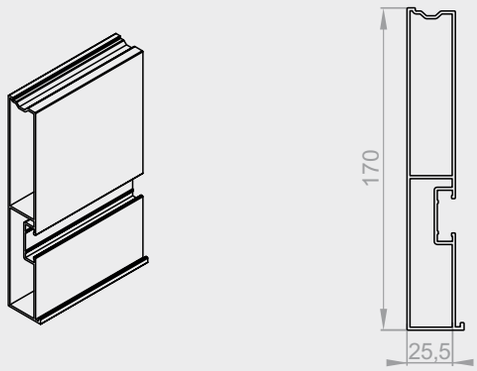

PWP-020

Side frame – width.

ALU 1rm 1,93kg

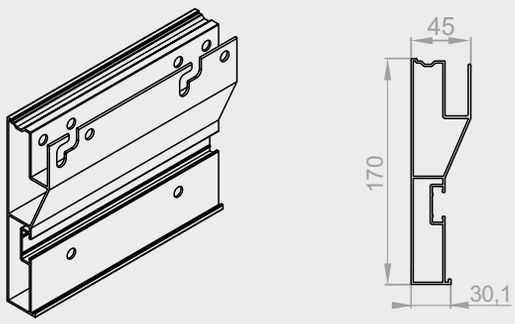

PWP-030

Side frame – outreach.

ALU 1rm 2,24kg

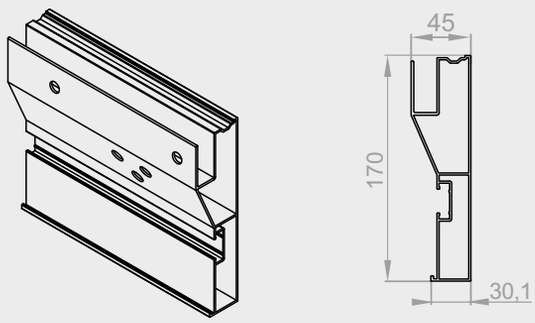

PWP-031 S

Side frame – Motor outreach.

ALU 1rm 2,24kg

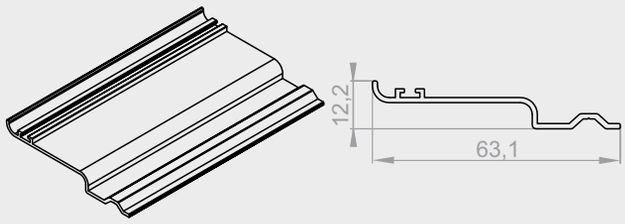

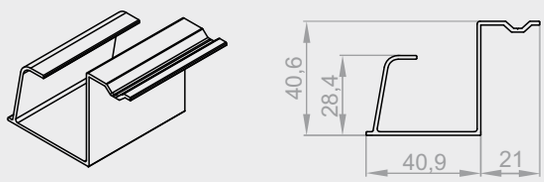

PWP-050

The first fixed slat.

ALU 1rm 0,512kg

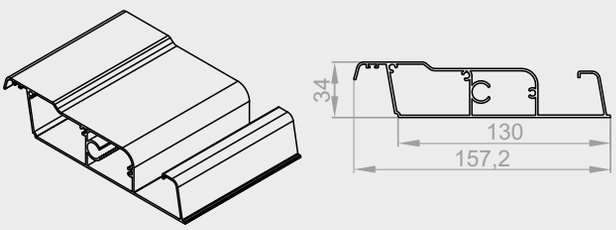

PWP-060

Roof slat.

ALU 1rm 1,61kg

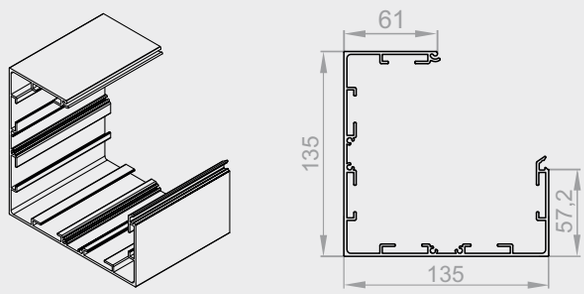

PWP-070

Load bearing column.

ALU 1rm 2,88kg

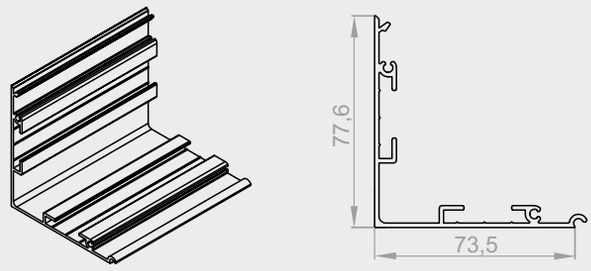

PWP-080

External casing of the column.

ALU 1rm 0,99kg

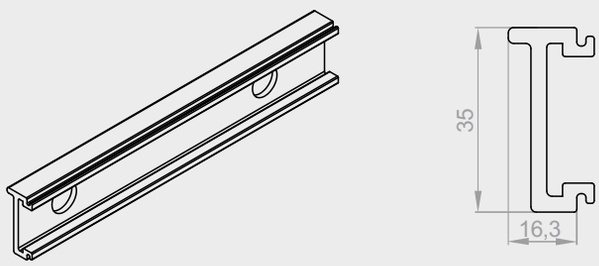

PWP-090

Slat bracket profile.

ALU 1rm 0,38kg

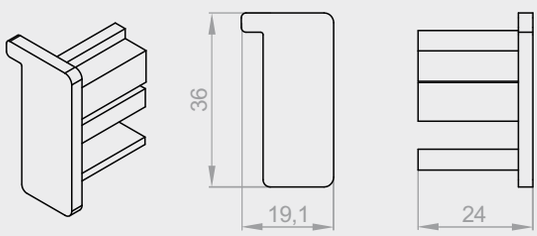

PWD-110 L/P

Cap of the slat bracket profile.

ALU 1set 0,009kg

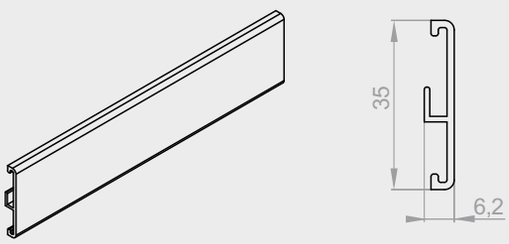

PWP-170

Slat masking profile.

ALU 1rm 0,185kg

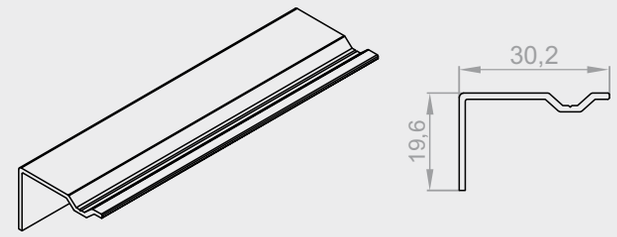

PWP-110

Upper end cap (outreach).

ALU 1rm 0,17kg

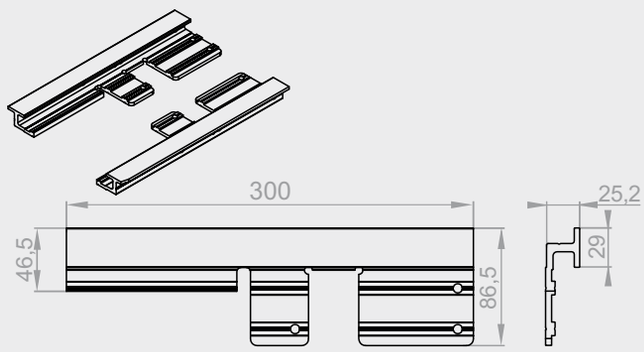

PWP-130 L/P

Left/right corner bracket.

ALU 1rm 0,38kg

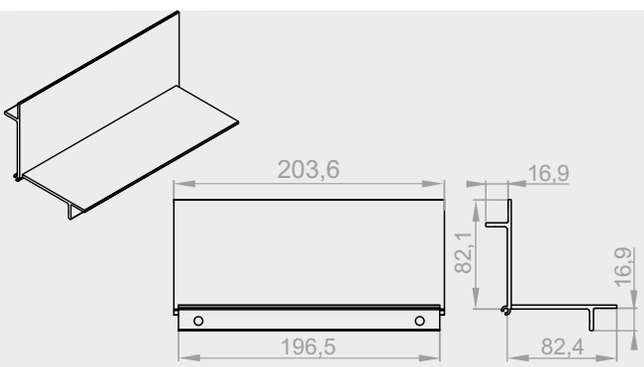

PWP-140

Corner bracket connector.

ALU 1rm 0,31kg

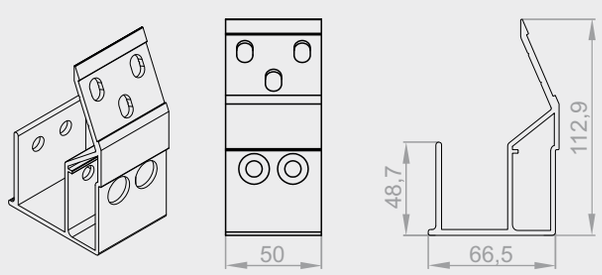

PWP-160

Mounting bracket to fix the motor to the gutter.

ALU 1rm 0,11kg

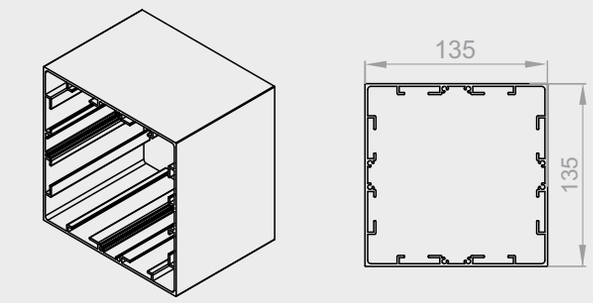

PWP-180

Load bearing column without revision.

ALU 1rm 3,889kg

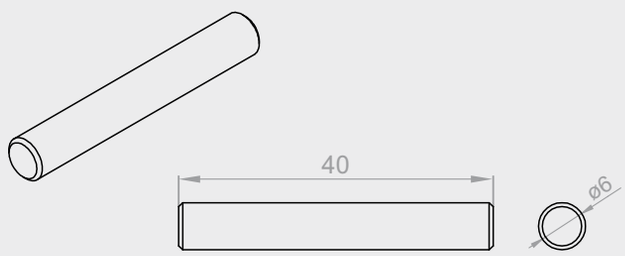

PWT-010

Roll shaft 6 mm.

STEEL 1pc 0,009kg

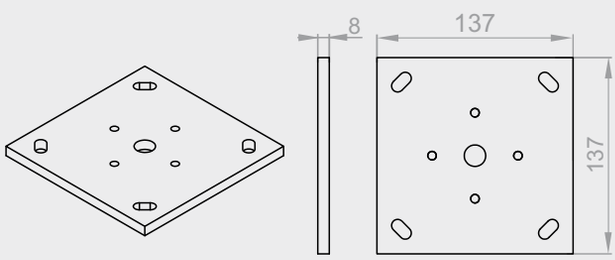

PWT-090

Column base bracket.

STEEL 1pc 1,128kg

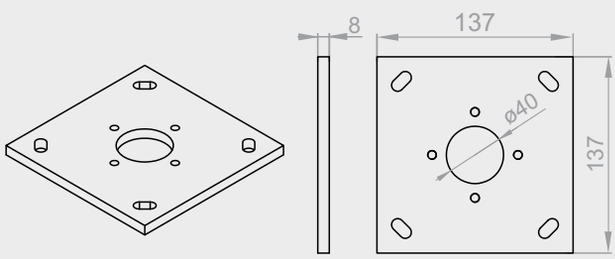

PWT-020

Column base bracket with 40 mm hole.

STEEL 1pc 1,106kg

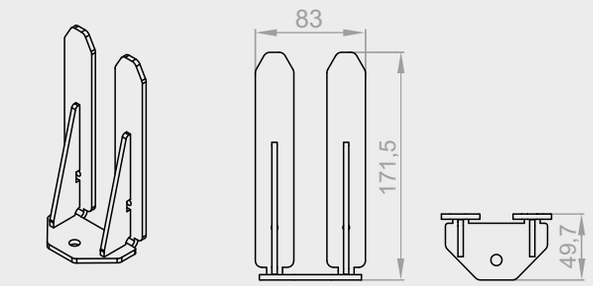

PWT-030

Column bracket.

STEEL 1pc 0,475kg

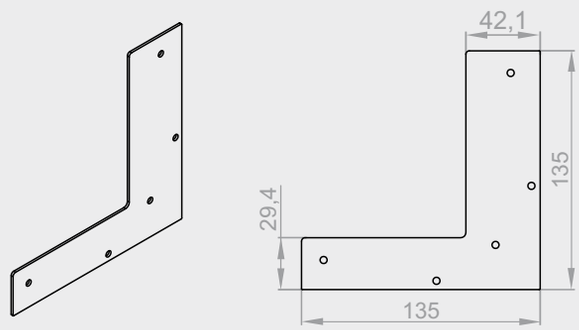

PWT-040

Upper end cap of the column.

STEEL 1pc 0,1kg

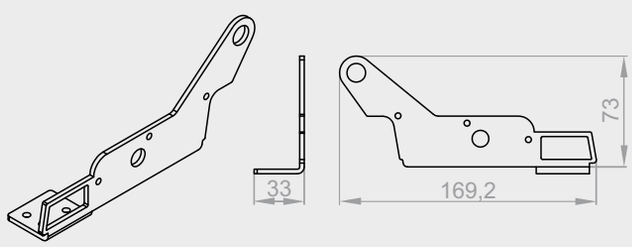

PWT-060

Bracket to connect slats to the motor.

STEEL 1pc 1,13kg

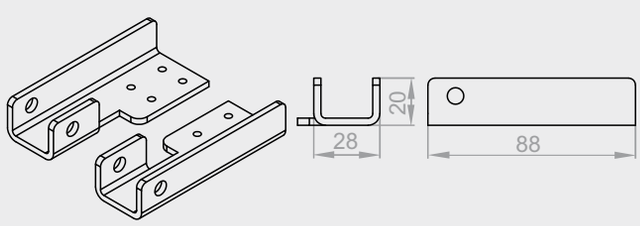

PWT-070 L/P

Left/right mounting bracket to fix the motor to the slats.

STEEL 1pc 0,1kg

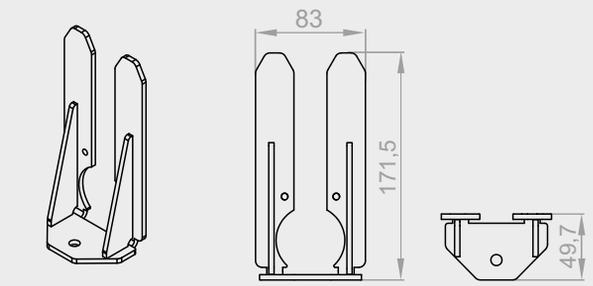

PWT-080

Column bracket with a drainage hole.

STEEL 1pc 0,451kg

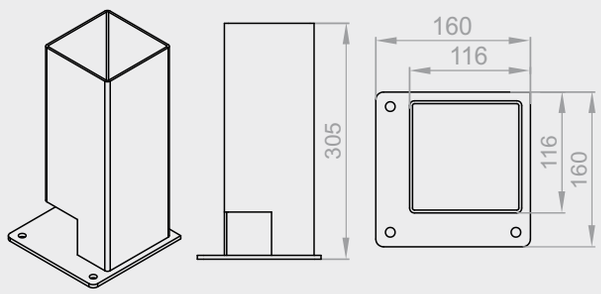

PWT-110

Column bracket.

STEEL 1pc 3,942kg

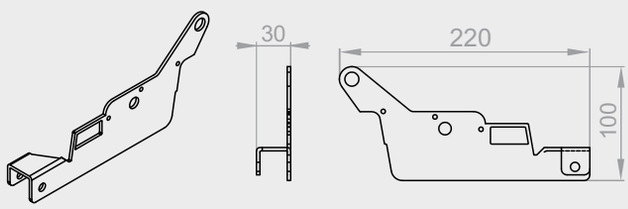

PWT-120

Bracket to connect slats to the motor.

STEEL 1pc 0,245kg

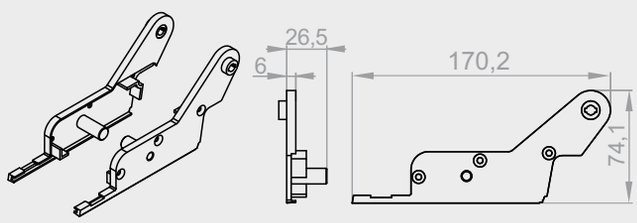

PWD-010 L/P

Left/right side end cap of the slat.

PVC 1pc 0,02kg

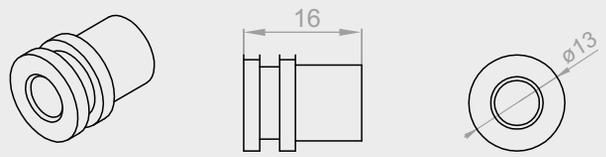

PWD-020

Slat mandrel.

PVC 1pc 0,01kg

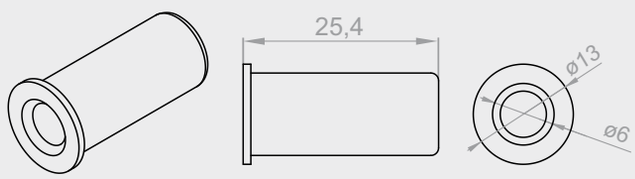

PWD-030

Sleeve for fastening driven lamella.

PVC 1pc 0,01kg

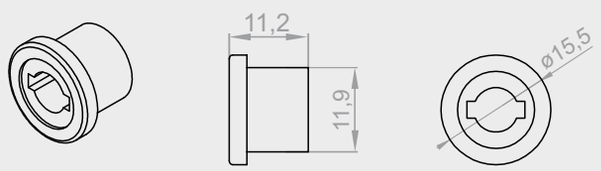

PWD-040

Ratchet Sleeve 12 mm for the motor-driven slats.

PVC 1pc 0,01kg

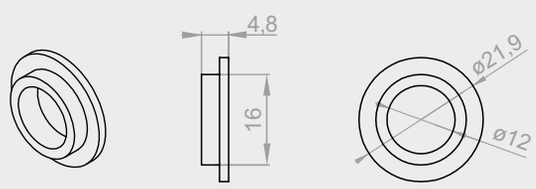

PWD-050

Sleeve 12 mm.

PVC 1pc 0,01kg

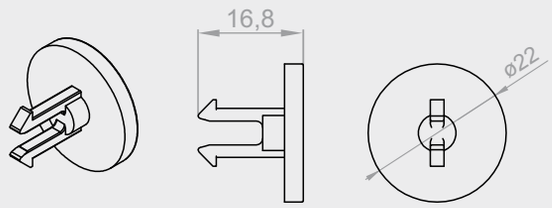

PWD-060

Slat clamping system.

PVC 1pc 0,01kg

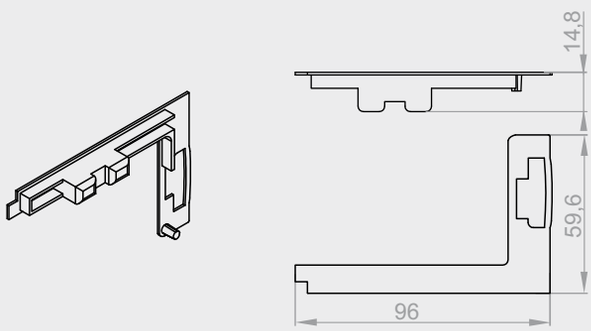

PWD-070

Bottom end cap of the gutter – width.

PVC 1pc 0,005kg

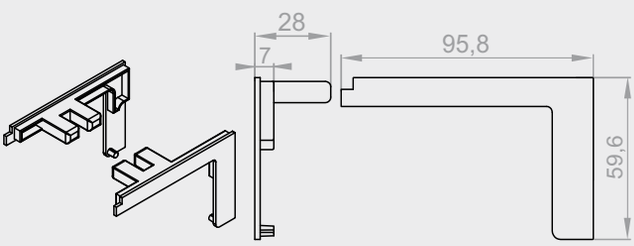

PWD-080 L/P

Left/right bottom end cap of the gutter (outreach).

PVC 1pc 0,005kg

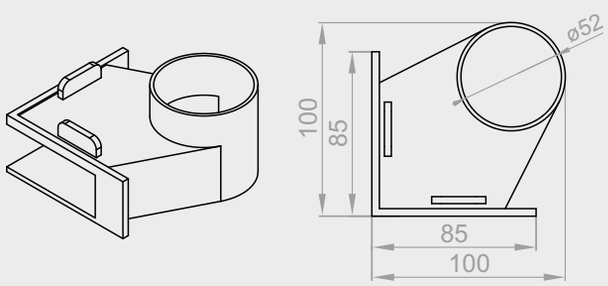

PWD-100

Water outlet at the bottom of the column.

PVC 1pc 0,688kg

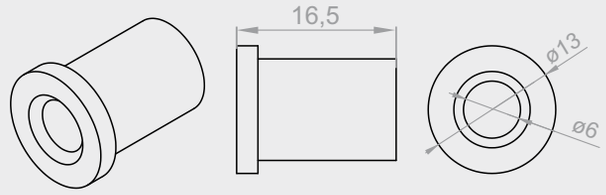

PWD-120

Slat mandrel 2.

PVC 1pc 0,001kg

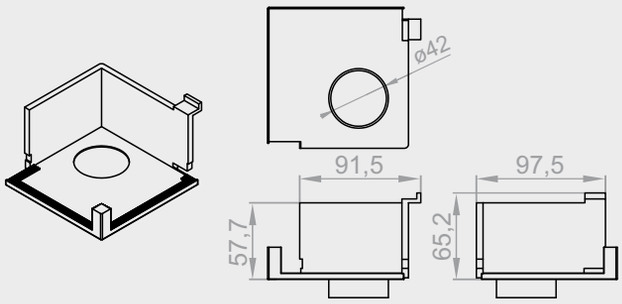

PWU-010 L/P

Left/right corner seal.

1pc 0,09kg

Dimensioning of PR6000 pergola

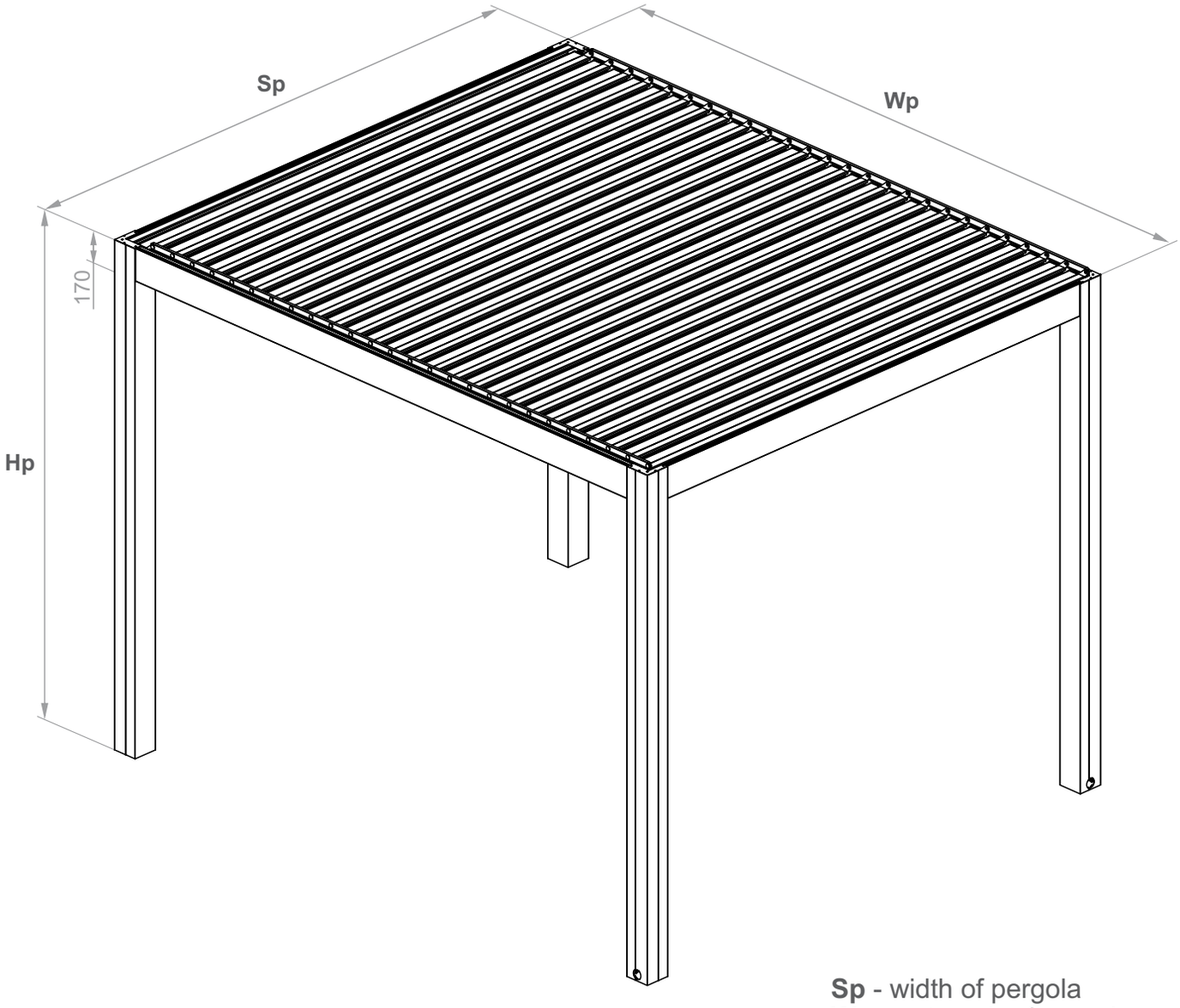

Sp - width of pergola
Wp - outreach of pergola
Hp - height of pergola